# EEE 1111 Electrical Circuit I

## Book reference:

1. Fundamental-of-Electric Circuits by Alexander
2. Introductory-circuit-analysis by Boyelstate
3. Alternating Current Circuits by G.F.Corcoran

**Prepared by**
**Md. Shizer Rahman**
**Chairman**
**Department of Electrical and Electronic Engineering**
**Jamalpur Science & Technology University**

# Current

## Current

Electric current is the time rate of change of charge, measured in amperes ($A$).

The relationship between current $i$, charge $q$, and time $t$ is given by

$$i \triangleq \frac{dq}{dt}.$$

$$1A = 1 coulomb/second.$$

The charge transferred between time $t_0$ and $t$ is given by

$$Q \triangleq \int_{t_0}^{t} i dt.$$

The direction of current flow is conventionally taken as the direction of positive charge movement.

# Current[Cntd.]

## Direct Current

A direct current (dc) is a current that remains constant with time.

By convention the symbol $I$ is used to represent dc current. The capital letter $I$ was chosen from the French word for current, *intensité*.

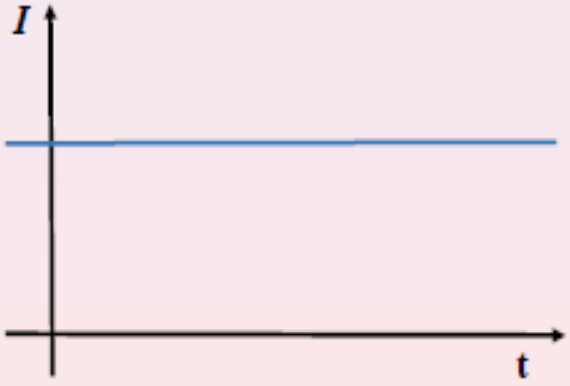


Fig. 1. Direct current.

# Alternating Current

**Alternating Current**

An alternating current (ac) is a current that varies sinusoidally with time.

By convention the symbol $i$ is used to represent ac current.

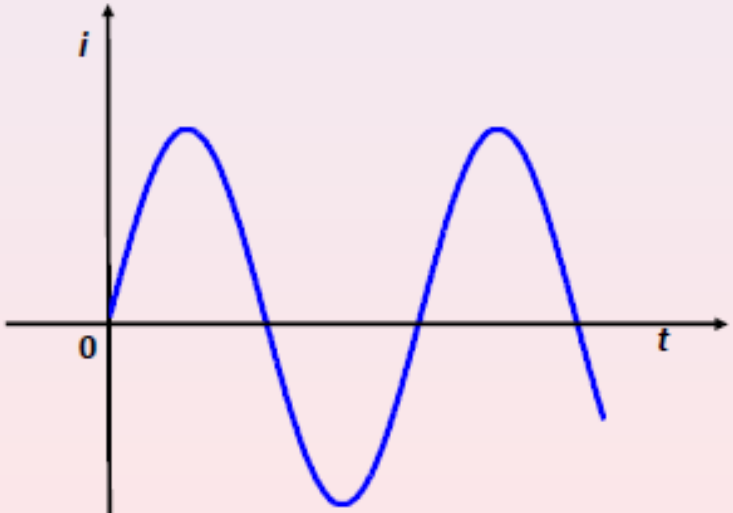


Fig. 1. Alternating current.

# Voltage

**Voltage**

Voltage (or potential difference) is the energy required to move a unit charge through an element, measured in volts ($V$).

The voltage between two points a and b in an electric circuit is given by

$$v_{ab} \triangleq \frac{dw}{dq}$$

$$1volt = 1joule/coulomb = 1newton - meter/coulomb$$

- A constant voltage is called a dc voltage and is represented by $V$, whereas a sinusoidally time-varying voltage is called an ac voltage and is represented by $v$.
- A dc voltage is commonly produced by a battery and ac voltage is produced by an electric generator.

# Voltage

1. The potential at point a with respect to point b is $v_{ab}$.
2. Point a is $v_{ab}$ volts above point b and point b is $-v_{ab}$ volts above point a.
3. There is a $v_{ab}$ voltage drop from a to b or equivalently a $v_{ab}$ voltage rise from b to a.
4. In general, $v_{ab} = -v_{ba}$.

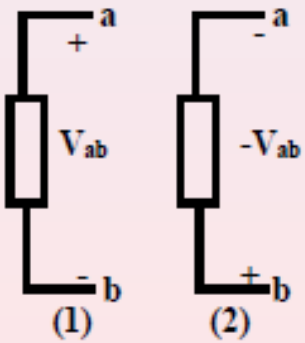


Fig. Voltage polarity.

# Power

**Power**

Power is the time rate of expanding or absorbing energy, measured in watts ($W$).

Mathematically,

$$p \triangleq \frac{dw}{dt} = \frac{dw}{dq} \cdot \frac{dq}{dt} = vi$$

- The power absorbed ar supplied by an element is the product of the voltage across the element and the current through it.
- If current enters the positive terminal of the voltage then $p = +vi$ and if current enters the negative terminal of the voltage then $p = -vi$.
- $p = +vi$ implies that the element is absorbing power.
- $p = -vi$ implies that the element is supplying power.

# Power

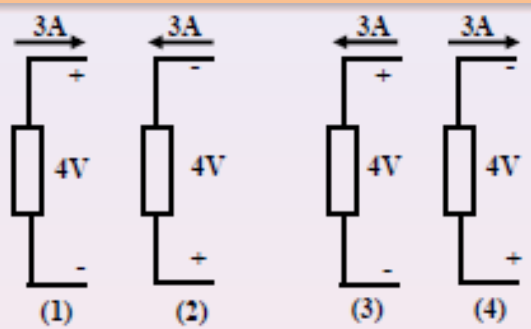


Fig. Absorbing and supplying power.

In fig. (1) and (2), $p = -4 \times 3 = -12W$.
In fig. (3) and (4), $p = 4 \times 3 = 12W$.

The algebraic sum of the power in a circuit, at any instant of time, is zero.

$$\sum p = 0$$

+Power absorbed = - Power supplied

Find the power delivered to an element at $t = 3$ ms if the current entering its positive terminal is

$$i = 5\cos 60\pi t \text{ A}$$

and the voltage is: (a) $v = 3i$, (b) $v = 3\,di/dt$.

**Solution:**

(a) The voltage is $v = 3i = 15\cos 60\pi t$; hence, the power is

$$p = vi = 75\cos^2 60\pi t \text{ W}$$

At $t = 3$ ms,

$$p = 75\cos^2(60\pi \times 3 \times 10^{-3}) = 75\cos^2 0.18\pi = 53.48 \text{ W}$$

(b) We find the voltage and the power as

$$v = 3\frac{di}{dt} = 3(-60\pi)5\sin 60\pi t = -900\pi \sin 60\pi t \text{ V}$$

$$p = vi = -4500\pi \sin 60\pi t \cos 60\pi t \text{ W}$$

At $t = 3$ ms,

$$\begin{aligned} p &= -4500\pi \sin 0.18\pi \cos 0.18\pi \text{ W} \\ &= -14137.167 \sin 32.4^\circ \cos 32.4^\circ = -6.396 \text{ kW} \end{aligned}$$

# Energy

**Energy**

Energy is the capacity to do work, measured in joules ($J$).

The energy absorbed or supplied by an element from time $t_0$ to time $t$ is given by

$$w = \int_{t_0}^{t} p dt = \int_{t_0}^{t} v i dt$$

Electric energy is measured in watt-hours($Wh$), where

$$1Wh = 3600J$$

**EXAMPLE** How much energy does a 100-W electric bulb consume in two hours?

**Solution:**

$$w = pt = 100\ (\mathrm{W}) \times 2\ (\mathrm{h}) \times 60\ (\mathrm{min/h}) \times 60\ (\mathrm{s/min})$$
$$= 720{,}000\ \mathrm{J} = 720\ \mathrm{kJ}$$

This is the same as

$$w = pt = 100\ \mathrm{W} \times 2\ \mathrm{h} = 200\ \mathrm{Wh}$$

**PRACTICE PROBLEM**

A stove element draws 15 A when connected to a 120-V line. How long does it take to consume 30 kJ?

**Answer:** 16.67 s.

# Circuit Elements

There are two types of circuit elements:

1. Active circuit elements
2. Passive circuit elements

## Active circuit elements

Active circuit elements are capable of generating energy such as, generators, batteries, operational amplifiers etc.

## Passive circuit elements

Passive circuit elements are not capable of generating energy such as, resistors, capacitors, inductors etc.

Most important active elements are voltage and current sources which deliver power to the circuit connected to them. There are two kinds of sources.

1. Independent sources
2. Dependent sources

# Circuit element

**Independent source**

An ideal independent source is an active element that provides a specified voltage ar current that is completely independent of other circuit elements.

**Independent voltage source**

An ideal independent voltage source delivers to the circuit whatever current is necessary to maintain its terminal voltage. Example: Generators and batteries.

**Independent current source**

An ideal independent current source delivers to the circuit whatever voltage is necessary to maintain the designated current.

# Circuit element

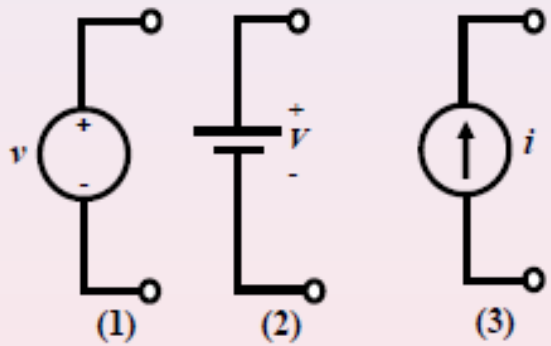


Fig. Symbol (1) and (2) for independent voltage source where (1) is used for constant and time varying voltage, (2) is used for constant voltage and (3) for independent current sources.

# Sources

**Dependent source**

An ideal dependent source is an active element in which the source quantity is controlled by another voltage or current.

Dependent sources are of four kinds:

1. Voltage-controlled voltage source (VCVS)
2. Current-controlled voltage source (CCVS)
3. Voltage-controlled current source (VCCS)
4. Current-controlled current source (CCCS)

**Application**

Dependent sources are used for modeling elements such as transistors, operational amplifiers and integrated circuits.

# Sources

**Ideal voltage controlled voltage source**

The equation for the supplied voltage $v_s$ is given by

$$v_s = \mu v_x,$$

where $v_x$ is the controlling voltage and $\mu$ is a multiplying constant that is dimensionless.

**Ideal current controlled voltage source**

The equation for the supplied voltage $v_s$ is given by

$$v_s = \rho i_x,$$

where $i_x$ is the controlling current and the multiplying constant, $\rho$ has the dimension volts per ampere.

# Sources

### Ideal voltage controlled current source

The equation for the supplied current $i_s$ is given by

$$i_s = \alpha v_x,$$

where $v_x$ is the controlling voltage and the multiplying constant $\alpha$ has a dimension of ampere per volt.

### Ideal current controlled current source

The equation for the supplied current $i_s$ is given by

$$i_s = \beta i_x,$$

where $i_x$ is the controlling current and the multiplying constant, $\beta$ is dimensionless.

# Sources

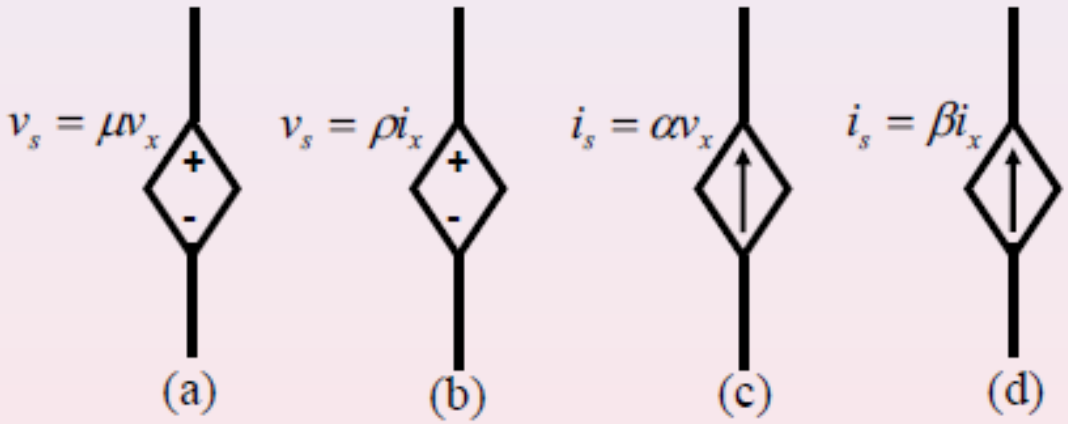


Fig. Symbol for (a) ideal voltage controlled voltage source , (b) ideal current controlled voltage source, (c) ideal voltage controlled current source, (d) ideal current controlled current source.

# Resistor and Resistance

**Resistor**

The circuit element used to impede the flow of current or, more specifically, the flow of electric charge is called resistor.

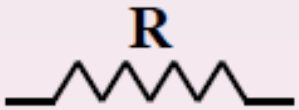


Fig. Symbol for resistor.

**Resistance**

The capacity of resistor to impede the flow of current or, more specifically, the flow of electric charge is called resistance,expressed by R and measured in ohms($\Omega$).

# Resistor and Resistance

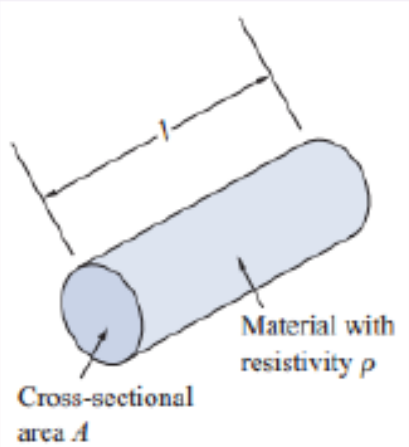


Fig. Resistance.

Mathematically,

$$R = \rho \frac{l}{A}$$

where,
$\rho$ = Resistivity of the material in ohm-meters
$l$ = Length of the material
$A$ = Area of cross section of the material.

# Short and open circuit

## Short Circuit

A short circuit is a circuit element with resistance approaching zero i,e, $R = 0$. For a short circuit $v = iR = 0$.

## Open Circuit

An open circuit is a circuit element with resistance approaching infinity i,e, $R = \infty$. For an open circuit, $i = \lim_{R \to \infty} \frac{v}{R} = 0$.

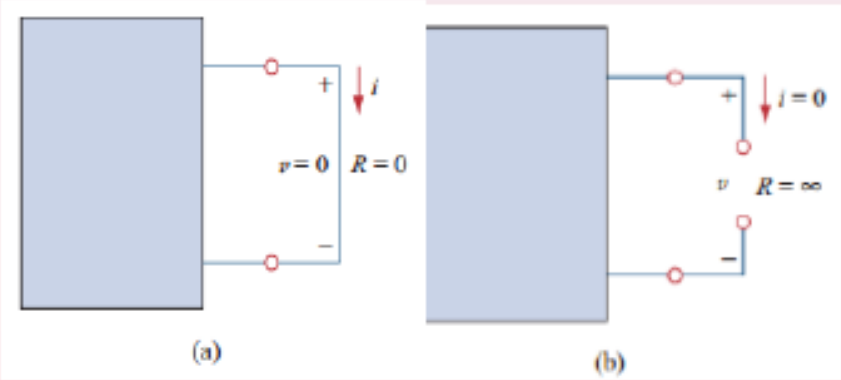


Fig. (a) short circuit and (b) open circuit.

# Types of resistor

**Types of Resistors**

1. Fixed i,e, their resistance is constant.
2. Variable i,e, their resistance is adjustable. Such as, potentiometer or pot.

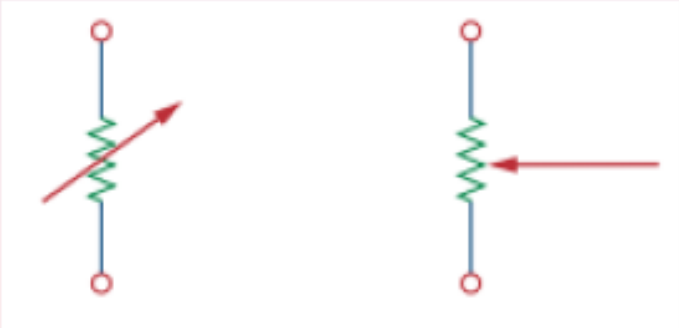

Fig. Symbol for variable resistance.

# Inductor

## Inductor

Inductor is a passive element designed to store energy in its magnetic field. It consists of a coil of conducting wire. Inductors may be fixed or variable. The core may be made of iron, steel, plastic, or air.

## Application

1. Electronics and power system
2. Power supplies, transformers, radios, TVs, radars and electric motors.

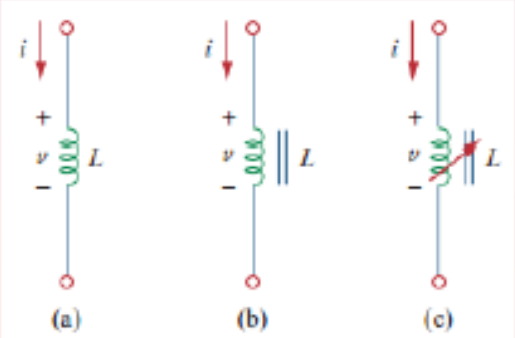


Fig. Symbol for inductor (a) air-core, (b) iron core, (c) variable iron-core.

# Inductor

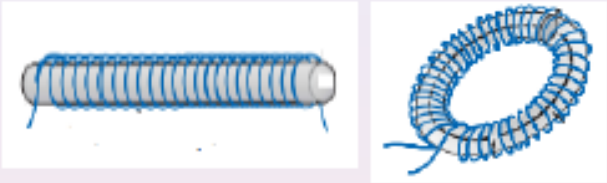

(a) (b)

Fig. Various inductor configurations (a) solenoidal (b) toroidal.

## Types and Configurations

Inductors are of two types: *fixed* and *variable*. An inductor may have different configurations such as solenoidal, toroidal etc.

## Inductance

Inductance is the property whereby an inductor exhibits opposition to the change of current flowing through it, measured in henrys ($H$).

The inductance of a coil varies directly with the magnetic properties of the coil. Ferromagnetic materials, therefore, are frequently employed to increase the inductance by increasing the flux linking the coil.

# Inductor

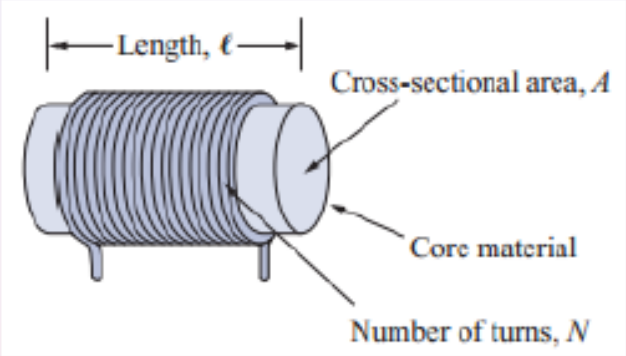


Fig. A typical inductor.

The inductance of an inductor is given by

$$L = \frac{N^2 \mu A}{l},$$

where,
$N$ = Number of turns
$\mu$ = Permeability of the core
$A$ = Cross section of the core
$l$ = length of the core

# Inductor

Voltage-current relationship of an inductor is given by

$$v = L\frac{di}{dt}$$

$$i = \frac{1}{L}\int_{t_0}^{t} v(t)dt + i(t_0)$$

The power delivered to the inductor is

$$p = vi = (L\frac{di}{dt})i$$

The energy stored in the inductor is given by

$$w = \int_{-\infty}^{t} pdt = \int_{-\infty}^{t} (L\frac{di}{dt})idt = L\int_{i(-\infty)}^{i(t)} idi = \frac{1}{2}Li^2$$

# Inductor

- When the current through an inductor is not changing with time i,e, dc current ($\frac{di}{dt} = 0$), the voltage across the inductor is zero.Thus, inductor is an short circuit to dc.
- An inductor resists an abrupt change in the current through it. A discontinuous change in current requires infinite voltage, which is physically impossible. Conversely, voltage across an inductor can change instantaneously.
- The ideal inductor does not dissipate energy. It takes power from the circuit when storing energy in its field and returns previously stored energy when delivering power to the circuit.
- A real, non-ideal inductor has a series winding resistance as it is made of conducting materials, which has some resistance. The non-ideal inductor also has a winding capacitance which is due to the capacitive coupling between the conducting coils.

# Capacitor

## Capacitor

Capacitor is a passive element designed to store energy in its electric field. It consists of two conducting plates separated by an insulator or dielectric. The plate may be aluminium foil while the dielectric may be air, ceramic, paper or mica.

## Application

1. Tuning circuits of radio receivers
2. Dynamic memory elements in computer system
3. To block dc, pass ac, shift phase, store energy, start motors and suppress noise.

## Types

Two types of capacitors are available. Such as

1. Fixed capacitor
2. Variable capacitor or trimmer capacitor or padder

# Capacitor

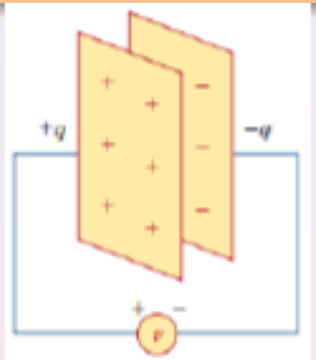


Fig. A capacitor with applied voltage $v$.

When a voltage source is connected to the capacitor,the source deposits a positive charge $+q$ on one plate and a negative charge $-q$ on the other. The amount of charge stored, represented by $q$, is directly proportional to the applied voltage so that

$$q = Cv,$$

where, $C$ is known as the capacitance.

**Capacitance**

Capacitance is the ratio of the charge on one plate of a capacitor to the voltage difference between the two plates, measured in farads (F).

$$1 farad = 1 coulomb/volt$$

# Capacitor

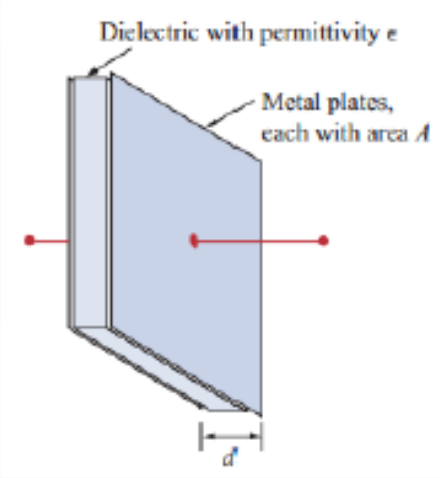


Fig. A typical capacitor.

For parallel plate capacitor, the capacitance is given by

$$C = \frac{\epsilon A}{d},$$

where,

$\epsilon$ = Permittivity of the dielectric material between the plates

$A$ = Surface area of each plate

$d$ = Distance between the plates

# Capacitor

Current-voltage relationship of a capacitor is given by

$$i = C\frac{dv}{dt}$$

$$v = \frac{1}{C}\int_{t_0}^{t} i dt + v(t_0)$$

The instantaneous power delivered to the capacitor is

$$p = vi = Cv\frac{dv}{dt}$$

The energy stored in the capacitor is given by

$$w = \int_{-\infty}^{t} p dt = C\int_{-\infty}^{t} v\frac{dv}{dt}dt = C\int_{v(-\infty)}^{v(t)} v dv = \frac{1}{2}Cv^2 = \frac{q^2}{2C}$$

# Capacitor

- When the voltage across a capacitor is not changing with time i,e, dc voltage ($\frac{dv}{dt} = 0$), the current through the capacitor is zero.Thus, capacitor is an open circuit to dc.However, if a battery (dc voltage) is connected across a capacitor, the capacitor charges.
- A capacitor resists an abrupt change in the voltage across it. A discontinuous change in voltage requires infinite current, which is physically impossible. Conversely, current through a capacitor can change instantaneously.
- The ideal capacitor does not dissipate energy. It takes power from the circuit when storing energy in its field and returns previously stored energy when delivering power to the circuit.
- A real, non-ideal capacitor has a parallel-model leakage resistance.The leakage resistance may be as high as 100 $M\Omega$ and can be neglected for most practical applications.

# KIRCHOFF'S LAW

# NODES, BRANCHES, AND LOOPS

A branch represents a single element such as a voltage source or a resistor.

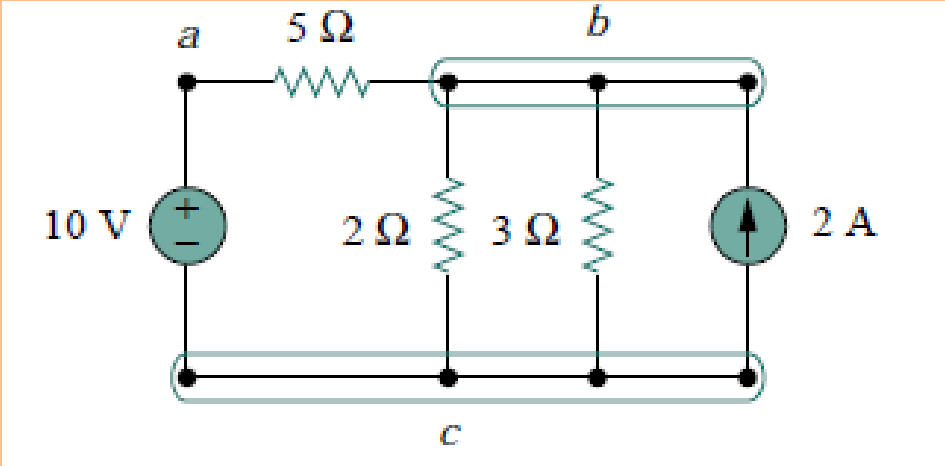


Figure 2.10 Nodes, branches, and loops.

In other words, a branch represents any two-terminal element. The circuit in Fig. 2.10 has five branches, namely, the 10-V voltage source, the 2-A current source, and the three resistors.

A node is the point of connection between two or more branches.

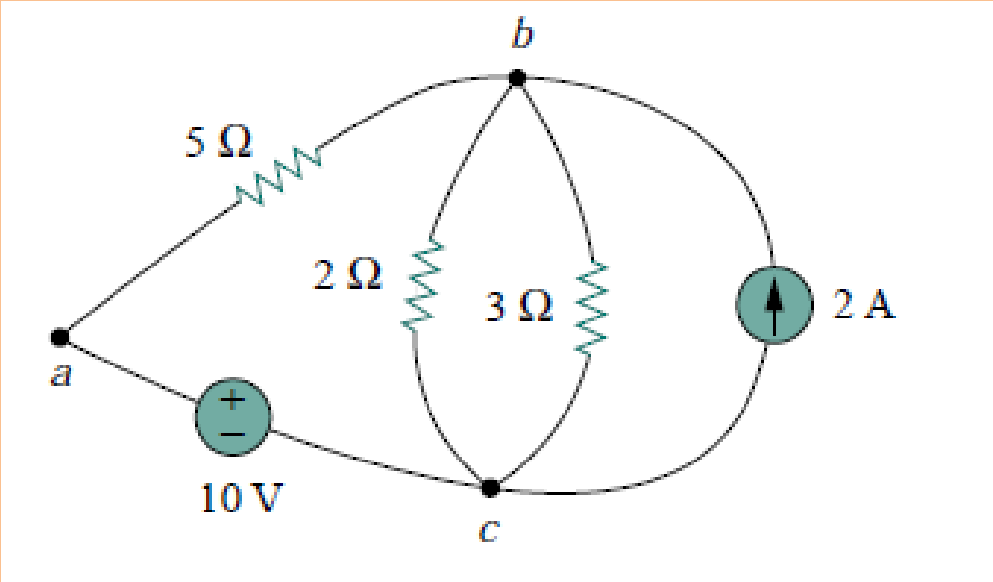


Figure 2.11 The three-node circuit of Fig. 2.10 is redrawn.

A loop is any closed path in a circuit.

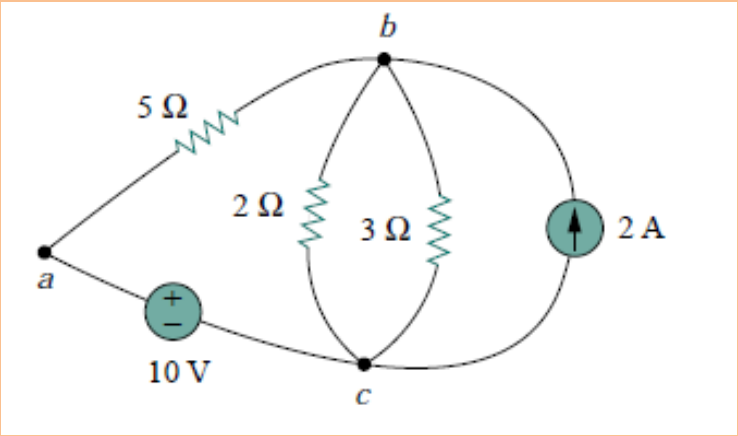


For example, the closed path *abca* containing the 2-Ω resistor in Fig. 2.11 is a loop. Another loop is the closed path *bcb* containing the 3-Ω resistor and the current source.

A network with $b$ branches, $n$ nodes, and $l$ independent loops will satisfy the fundamental theorem of network topology:

$$\boxed{b = l + n - 1}$$

Two or more elements are in series if they are cascaded or connected sequentially and consequently carry the same current.

Two or more elements are in parallel if they are connected to the same two nodes and consequently have the same voltage across them.

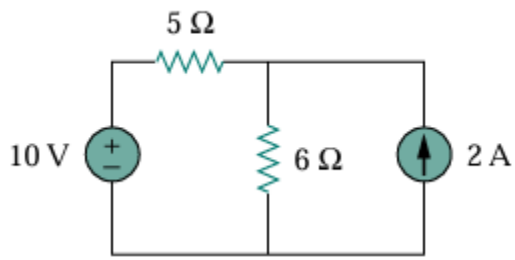


Figure 2.12 For Example 2.4.

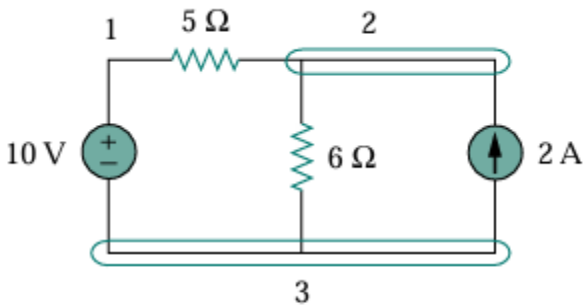


Figure 2.13 The three nodes in the circuit of Fig. 2.12.

Fig. 2.13. The 5-Ω resistor is in series with the 10-V voltage source because the same current would flow in both. The 6-Ω resistor is in parallel with the 2-A current source because both are connected to the same nodes 2 and 3.

# HISTORY OF KIRCHOFF'S LAW

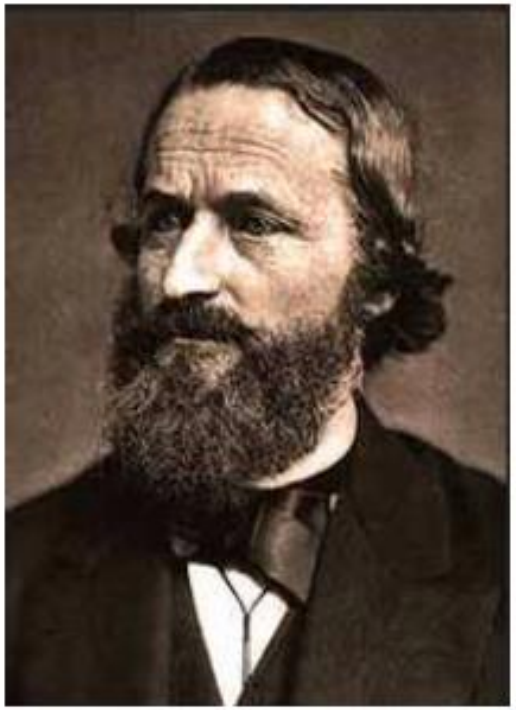

Gustav Robert Kirchhoff (German physicist)

- described two laws that became central to electrical engineering in 1845
- The laws were generalized from the work of Georg Ohm
- It's can also be derived from Maxwell's equations, but were developed prior to Maxwell's work

# INTRODUCTION

**What?**

- A pair of laws stating general restrictions on the current and voltage in an electric circuit.

**How?**

- The first of these states that at any given instant the sum of the voltages around any closed path, or loop, in the network is zero.
- The second states that at any junction of paths, or node, in a network the sum of the currents arriving at any instant is equal to the sum of the currents flowing away.

# TYPES OF KIRCHOFF'S LAW

KVL

- Kirchoff Voltage Law

KCL

- Kirchoff Current Law

# KVL

- Kirchoff's Voltage Law (KVL) states that the algebraic sum of the voltages across any set of branches in a closed loop is zero. i.e.;

$$\sum V_{acrossbranches} = 0$$

- Below is a single loop circuit. The KVL computation is expressed graphically in that voltages around a loop are summed up by traversing (figuratively walking around) the loop.

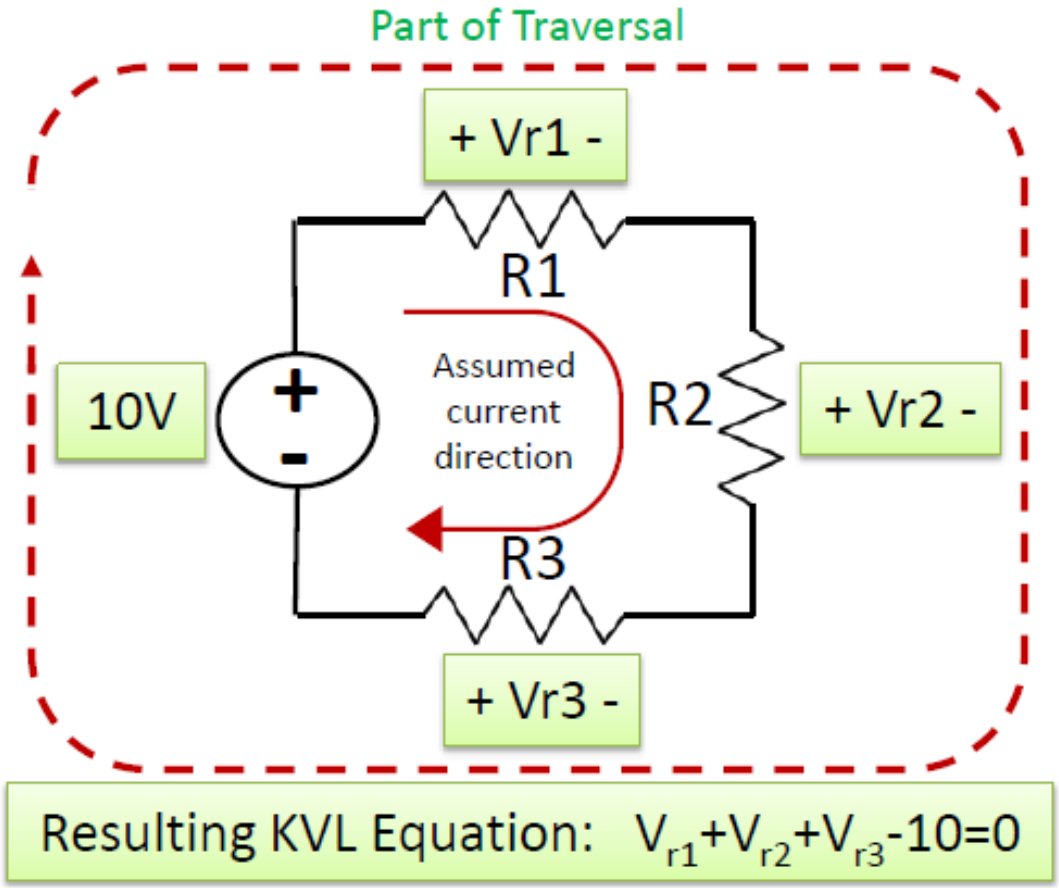

*Summation of voltage terms may be done in either direction*

Part of Traversal

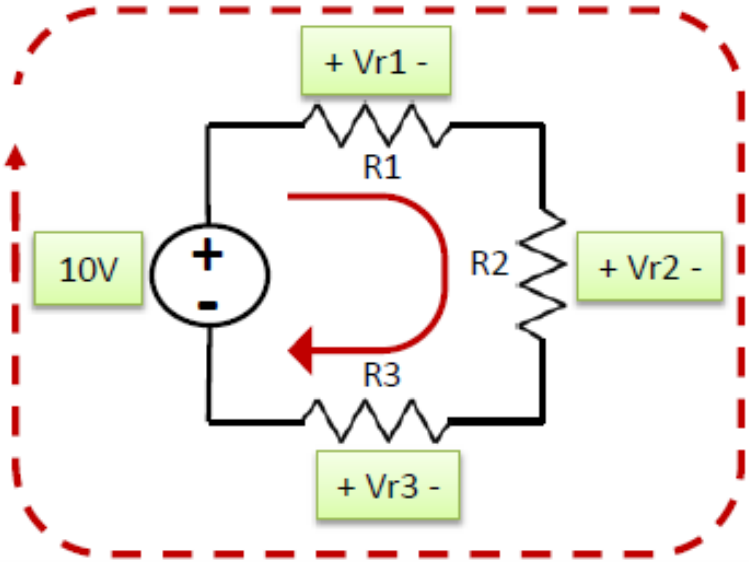


Resulting KVL Equation: $V_{r1}+V_{r2}+V_{r3}-10=0$

Part of Traversal

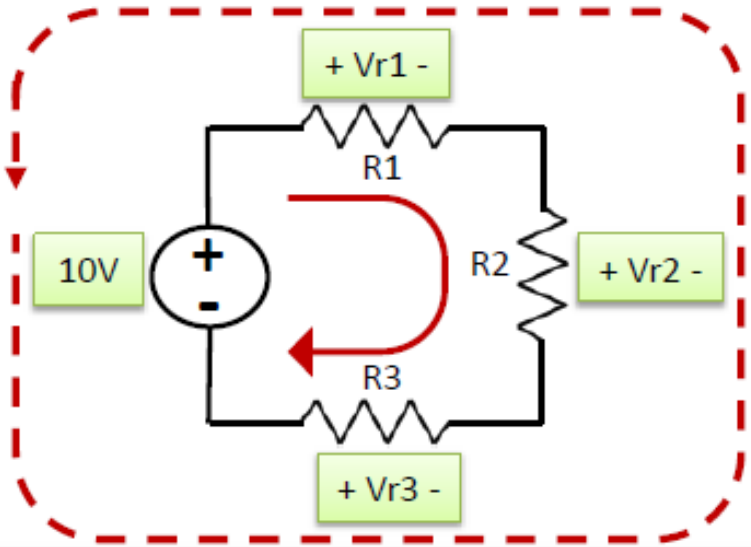


Resulting KVL Equation: $-V_{r1}-V_{r2}-V_{r3}+10=0$

*For both summations, the assumed current direction was the same*

# KCL

- Kirchhoff's Current Law generally states:

***The algebraic sum of all currents entering (+) and leaving (-) any point (junction) in a circuit must equal zero.***

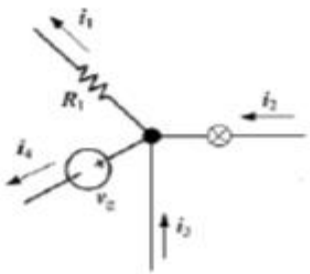


$$\sum_n i_n = i_1 + i_2 + i_3 + i_4 = 0$$

- Restated as:

***The sum of the currents into a junction is equal to the sum of the currents out of that junction.***

- The algebraic sum of all currents entering (+) and leaving (-) any point (junction) in a circuit must equal zero.

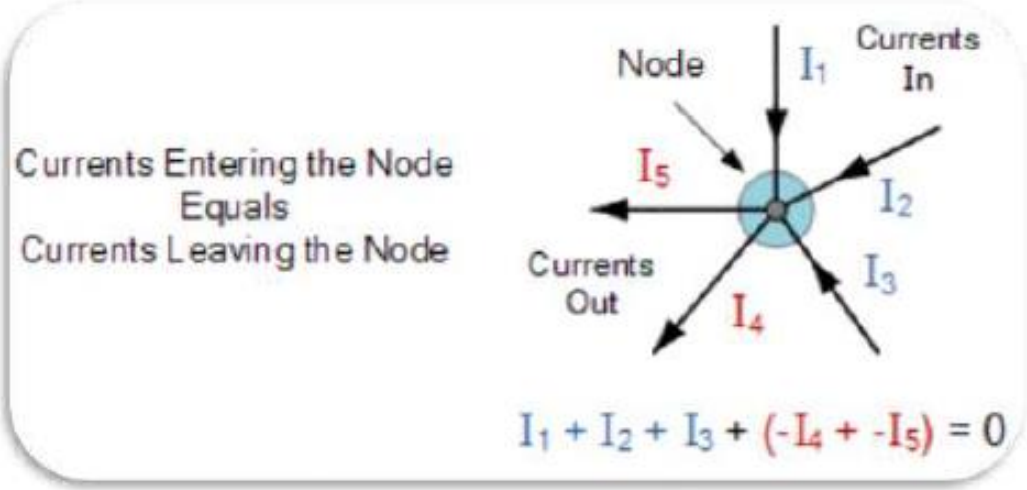


- Here, the 3 currents entering the node, $I_1$, $I_2$, $I_3$ are all positive in value and the 2 currents leaving the node, $I_4$ and $I_5$ are negative in value. Then this means we can also rewrite the equation as;

$$I_1 + I_2 + I_3 - I_4 - I_5 = 0$$

**Example:** **Use** Kirchhoff's voltage law to determine the unknown voltage for the following circuit

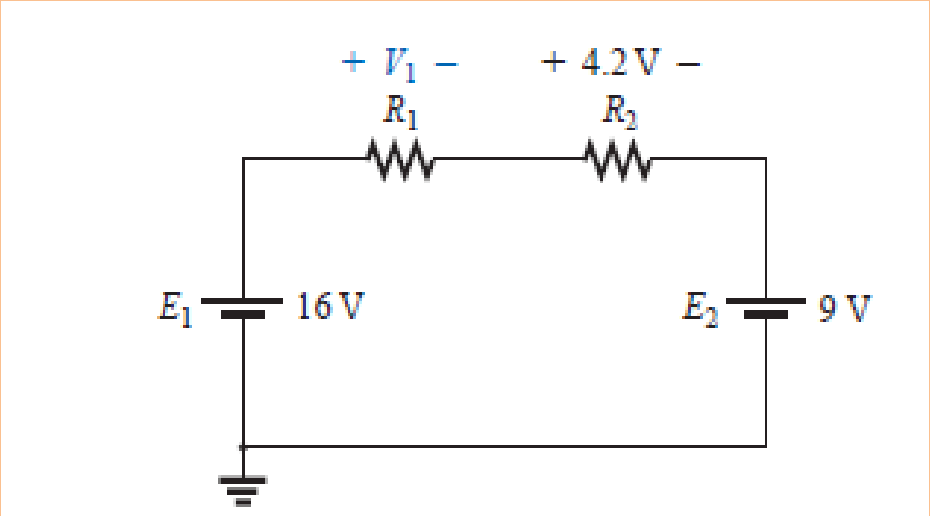


**Apply** Kirchhoff's voltage law to circuit

$$+E_1 - V_1 - V_2 - E_2 = 0$$

and

$$V_1 = E_1 - V_2 - E_2 = 16\text{ V} - 4.2\text{ V} - 9\text{ V}$$
$$= \mathbf{2.8\text{ V}}$$

**Example:** **Use** Kirchhoff's voltage law to determine the unknown voltage for the following circuit

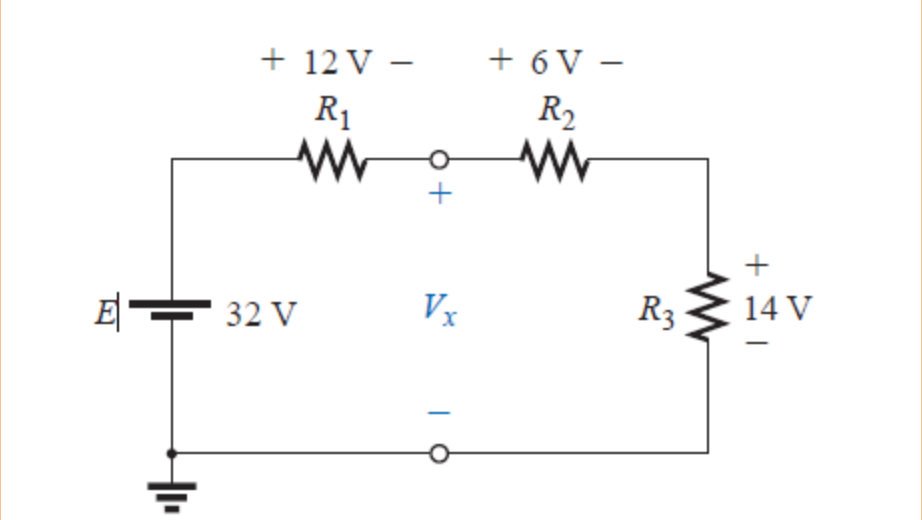


**Apply** Kirchhoff's voltage law to circuit

$$+V_x - V_2 - V_3 = 0$$

and

$$V_x = V_2 + V_3 = 6\,\text{V} + 14\,\text{V}$$
$$= \mathbf{20\,V}$$

**Example:** **Use** Kirchhoff's voltage law to determine the unknown voltage $v_1$ and $v_2$ for the following circuit

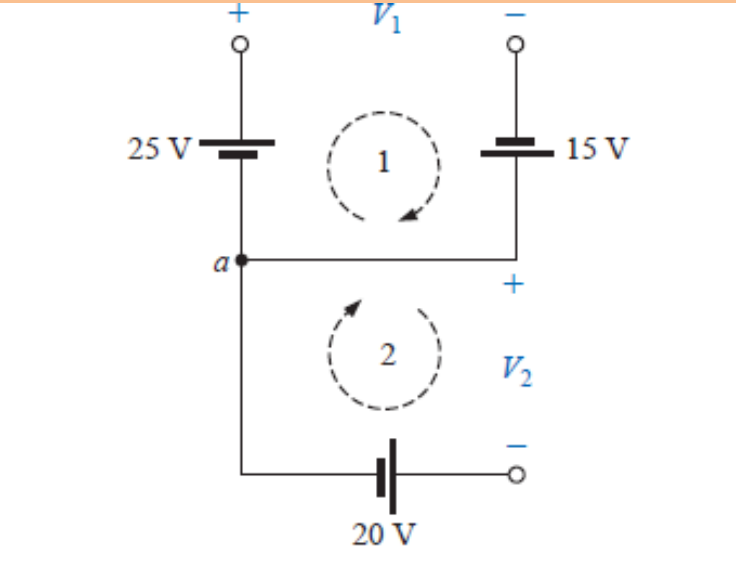


***Solution:*** For path 1, starting at point *a* in a clockwise direction:

$$+25\text{ V} - V_1 + 15\text{ V} = 0$$

and

$$V_1 = \mathbf{40\ V}$$

For path 2, starting at point *a* in a clockwise direction:

$$-V_2 - 20\text{ V} = 0$$

and

$$V_2 = \mathbf{-20\ V}$$

# SERIES CIRCUITS

*Two elements are in series if*

1. *They have only one terminal in common (i.e., one lead of one is connected to only one lead of the other).*
2. *The common point between the two elements is not connected to another current-carrying element.*

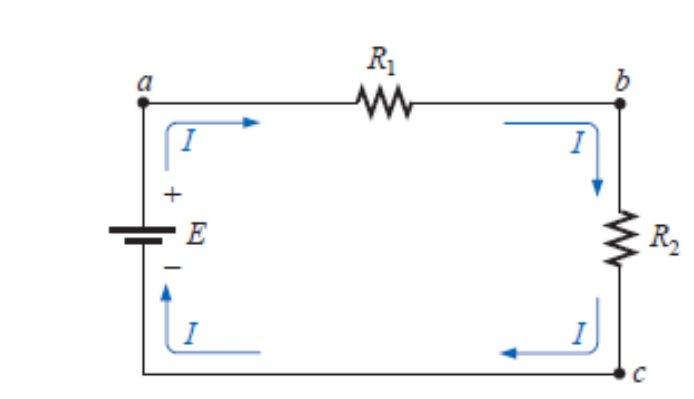


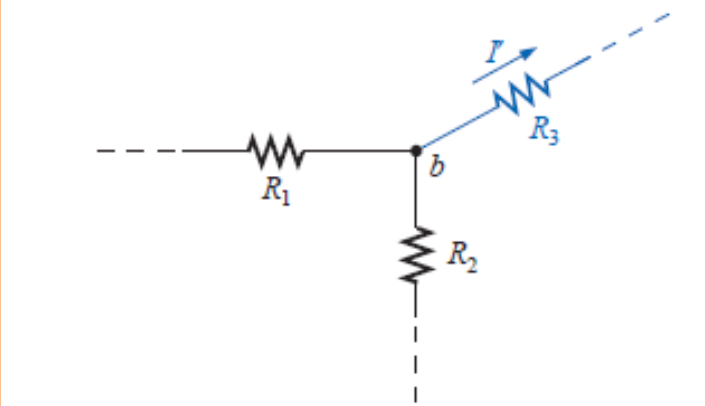


(b) $R_1$ and $R_2$ are not in series

# PARALLEL ELEMENTS

*Two elements, branches, or networks are in* **parallel** *if they have two points in common.*

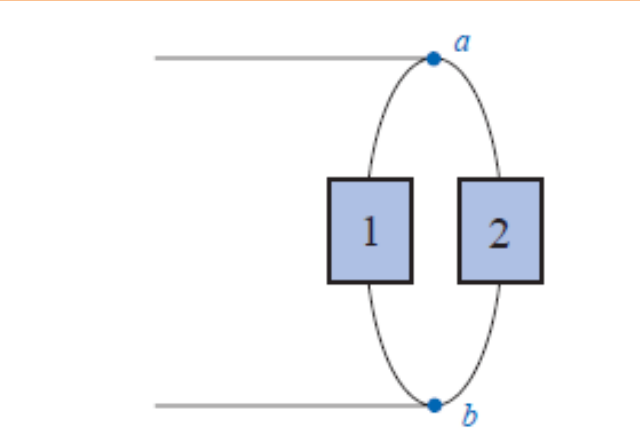


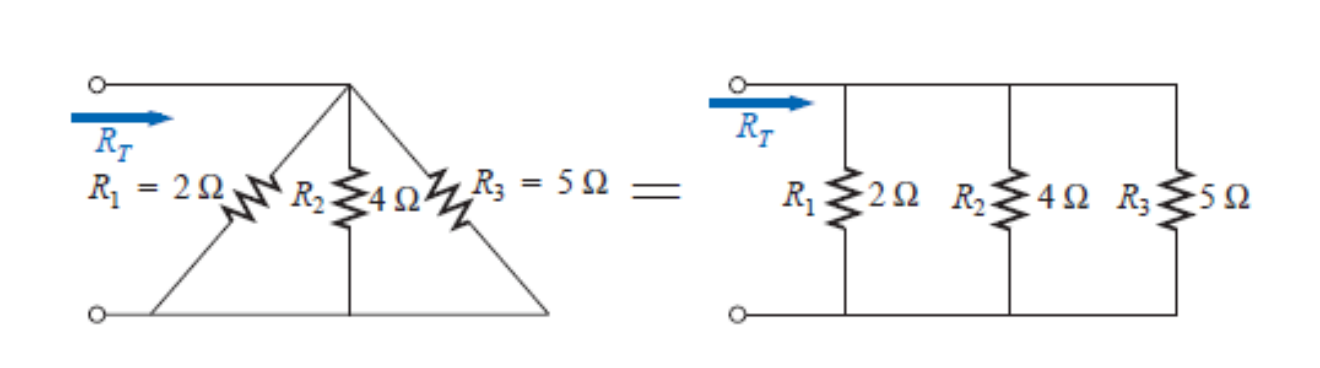

Find $R_{eq}$ for the circuit shown in Fig. 2.34.

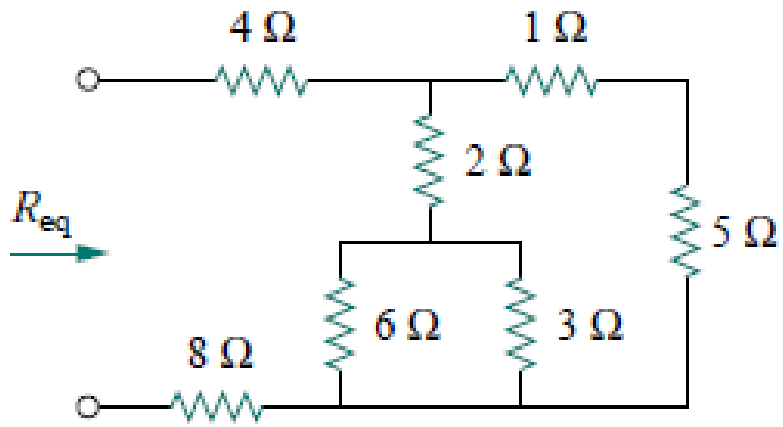


Figure 2.34 For Example 2.9.

Ans: 14.4 Ω

Calculate the equivalent resistance $R_{ab}$ in the circuit in Fig. 2.37.

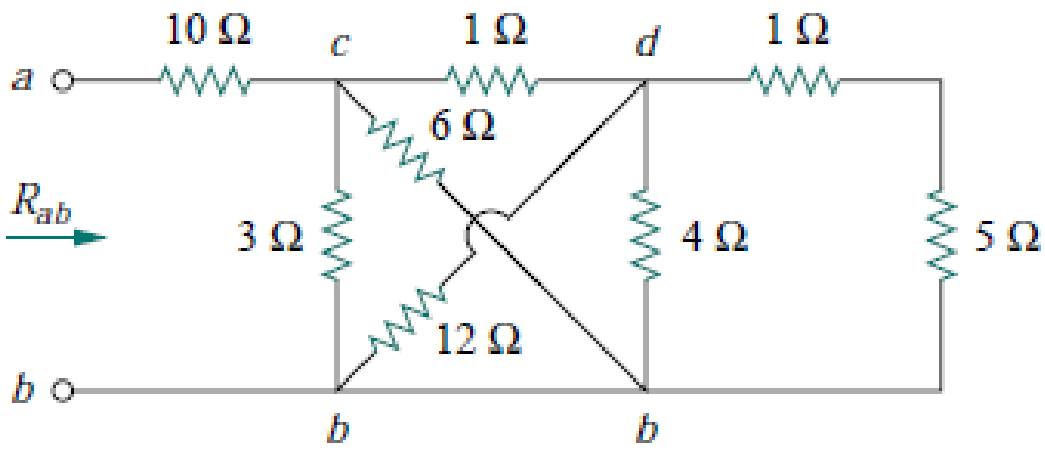


Figure 2.37 For Example 2.10.

**Solution:**

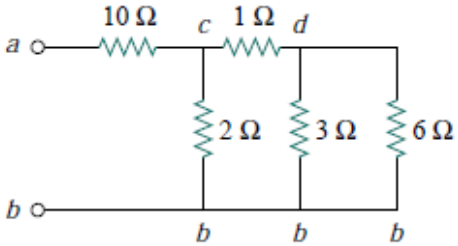


The 3-Ω and 6-Ω resistors are in parallel because they are connected to the same two nodes $c$ and $b$. Their combined resistance is

$$3\ \Omega \parallel 6\ \Omega = \frac{3 \times 6}{3+6} = 2\ \Omega \tag{2.10.1}$$

Similarly, the 12-Ω and 4-Ω resistors are in parallel since they are connected to the same two nodes $d$ and $b$. Hence

$$12\ \Omega \parallel 4\ \Omega = \frac{12 \times 4}{12+4} = 3\ \Omega \tag{2.10.2}$$

Also the 1-Ω and 5-Ω resistors are in series; hence, their equivalent resistance is

$$1\ \Omega + 5\ \Omega = 6\ \Omega \tag{2.10.3}$$

With these three combinations, we can replace the circuit in Fig. 2.37 with that in Fig. 2.38(a). In Fig. 2.38(a), 3-Ω in parallel with 6-Ω gives 2-Ω, as calculated in Eq. (2.10.1). This 2-Ω equivalent resistance is now in series with the 1-Ω resistance to give a combined resistance of $1\ \Omega + 2\ \Omega = 3\ \Omega$. Thus, we replace the circuit in Fig. 2.38(a) with that in Fig. 2.38(b). In Fig. 2.38(b), we combine the 2-Ω and 3-Ω resistors in parallel to get

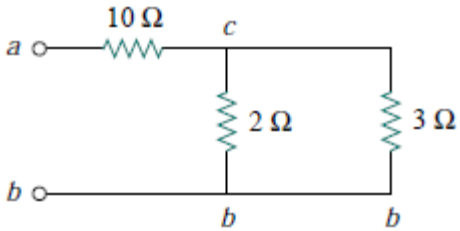


$$2\ \Omega \parallel 3\ \Omega = \frac{2 \times 3}{2+3} = 1.2\ \Omega$$

This 1.2-Ω resistor is in series with the 10-Ω resistor, so that

$$R_{ab} = 10 + 1.2 = 11.2\ \Omega$$

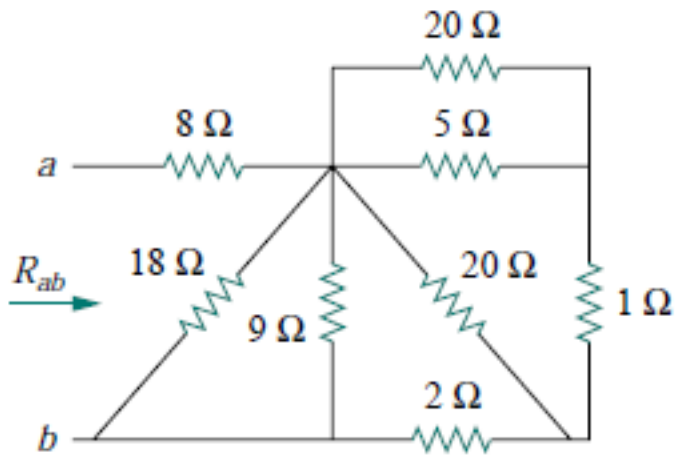


Figure 2.39 For Practice Prob. 2.10.

Find $R_{ab}$ for the circuit in Fig. 2.39.

**Answer:** 11 Ω.

**EXAMPLE 7.5** Find the indicated currents and voltages for the network of Fig. 7.13.

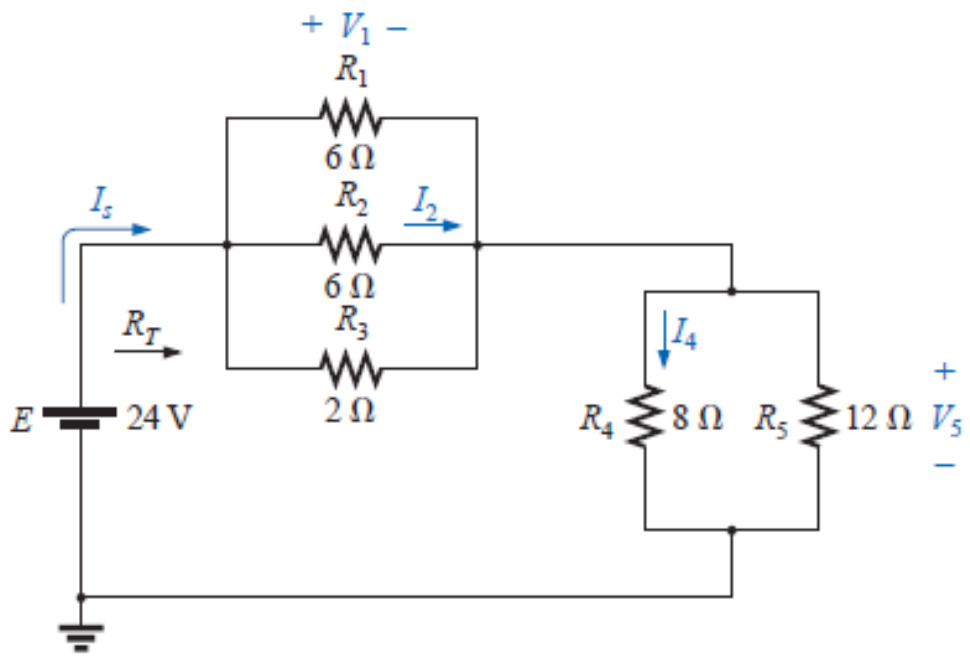


**FIG. 7.13**
*Example 7.5.*

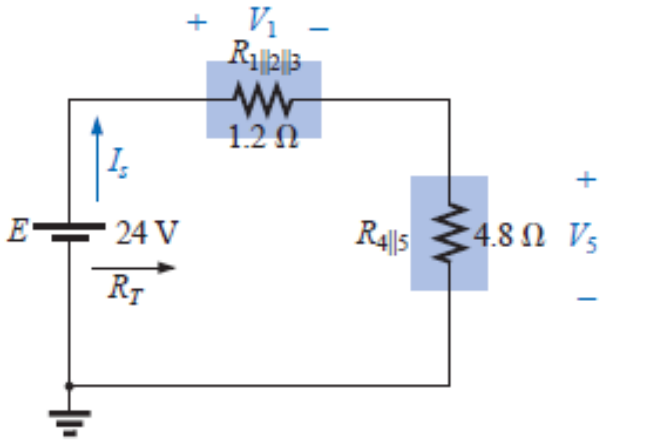


$$R_{1\|2} = \frac{R}{N} = \frac{6\ \Omega}{2} = 3\ \Omega$$

$$R_A = R_{1\|2\|3} = \frac{(3\ \Omega)(2\ \Omega)}{3\ \Omega + 2\ \Omega} = \frac{6\ \Omega}{5} = 1.2\ \Omega$$

$$R_B = R_{4\|5} = \frac{(8\ \Omega)(12\ \Omega)}{8\ \Omega + 12\ \Omega} = \frac{96\ \Omega}{20} = 4.8\ \Omega$$

The reduced form of Fig. 7.13 will then appear as shown in Fig. 7.15, and

$$R_T = R_{1\|2\|3} + R_{4\|5} = 1.2\ \Omega + 4.8\ \Omega = \mathbf{6\ \Omega}$$

$$I_s = \frac{E}{R_T} = \frac{24\ \text{V}}{6\ \Omega} = \mathbf{4\ A}$$

with

$$V_1 = I_s R_{1\|2\|3} = (4\ \text{A})(1.2\ \Omega) = \mathbf{4.8\ V}$$

$$V_5 = I_s R_{4\|5} = (4\ \text{A})(4.8\ \Omega) = \mathbf{19.2\ V}$$

Applying Ohm's law,

$$I_4 = \frac{V_5}{R_4} = \frac{19.2\text{ V}}{8\ \Omega} = \mathbf{2.4\ A}$$

$$I_2 = \frac{V_2}{R_2} = \frac{V_1}{R_2} = \frac{4.8\text{ V}}{6\ \Omega} = \mathbf{0.8\ A}$$

**EXAMPLE 7.7** For the network of Fig. 7.18, determine the voltages $V_1$ and $V_2$ and the current $I$.

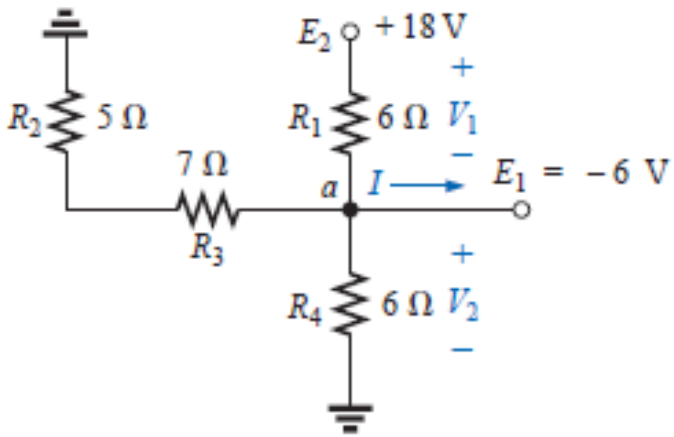


**FIG. 7.18**
*Example 7.7.*

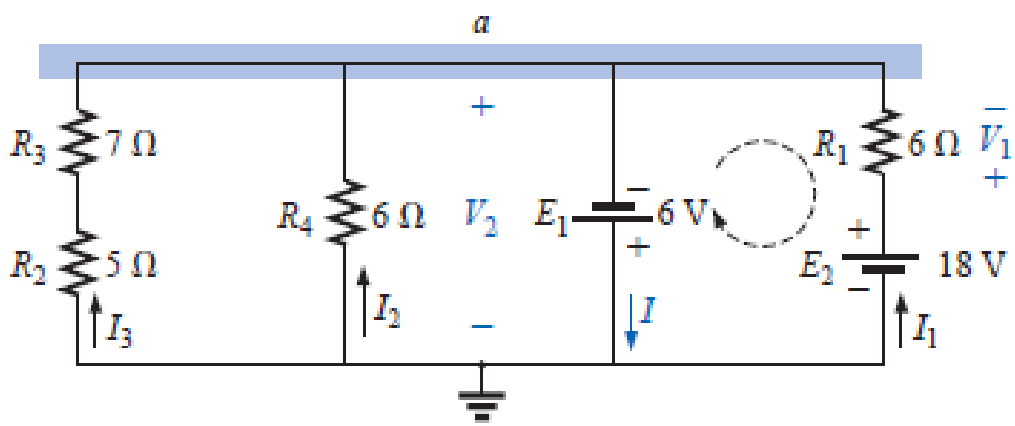


**FIG. 7.19**
*Network of Fig. 7.18 redrawn.*

and $$V_1 = E_2 + E_1 = 18\text{ V} + 6\text{ V} = \mathbf{24\text{ V}}$$

Applying Kirchhoff's current law to node *a* yields

$$\begin{aligned} I &= I_1 + I_2 + I_3 \\ &= \frac{V_1}{R_1} + \frac{E_1}{R_4} + \frac{E_1}{R_2 + R_3} \\ &= \frac{24\text{ V}}{6\ \Omega} + \frac{6\text{ V}}{6\ \Omega} + \frac{6\text{ V}}{12\ \Omega} \\ &= 4\text{ A} + 1\text{ A} + 0.5\text{ A} \\ I &= \mathbf{5.5\text{ A}} \end{aligned}$$

# Delta to Wye Conversion

To obtain the equivalent resistances in the wye network, we compare the two networks and make sure that the resistance between each pair of nodes in the delta or wye network is the same as the resistance between the same pair of nodes in the wye network. For terminals 1 and 2 In the following figure

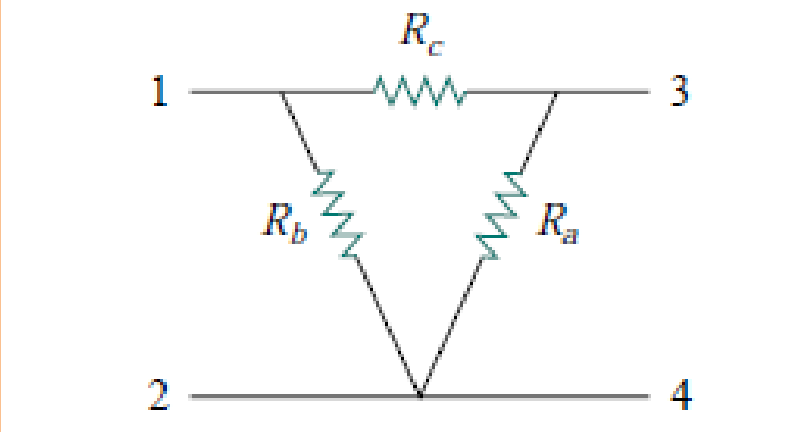


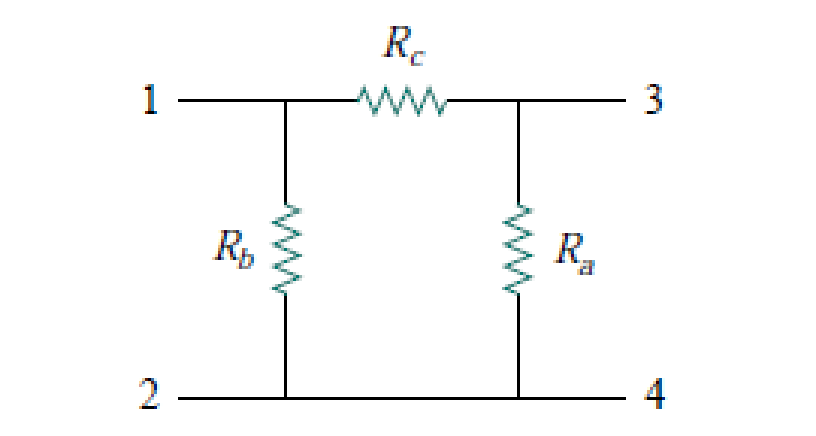


$$R_{12}(\mathrm{Y}) = R_1 + R_3$$

$$R_{12}(\Delta) = R_b \parallel (R_a + R_c)$$

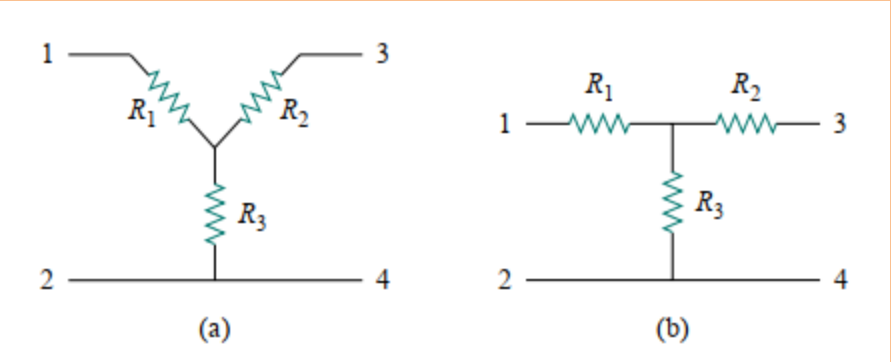

# Delta to Wye Conversion

Setting $R_{12}(\mathrm{Y}) = R_{12}(\Delta)$ gives

$$R_{12} = R_1 + R_3 = \frac{R_b(R_a + R_c)}{R_a + R_b + R_c}$$

Similarly,

$$R_{13} = R_1 + R_2 = \frac{R_c(R_a + R_b)}{R_a + R_b + R_c}$$

$$R_{34} = R_2 + R_3 = \frac{R_a(R_b + R_c)}{R_a + R_b + R_c}$$

.....(1)

$$R_1 - R_2 = \frac{R_c(R_b - R_a)}{R_a + R_b + R_c}$$

.....(2)

Adding equation (1) and (2) we get

$$R_1 = \frac{R_b R_c}{R_a + R_b + R_c}$$

# Delta to Wye Conversion

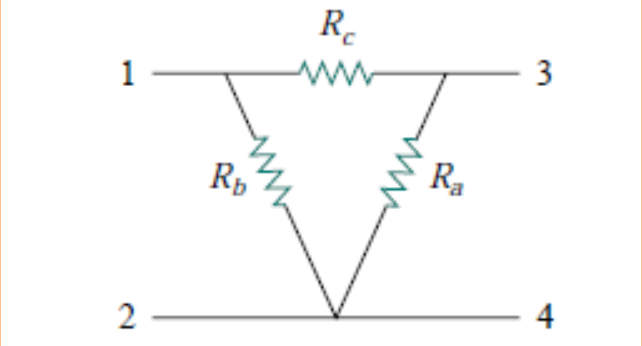


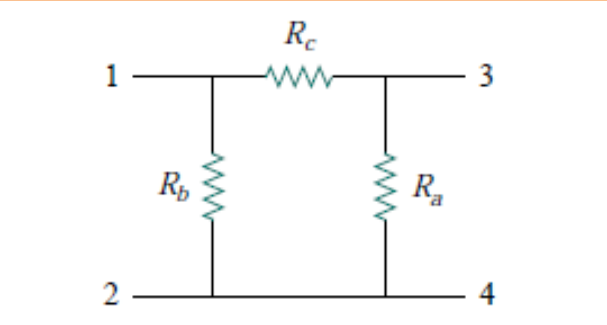


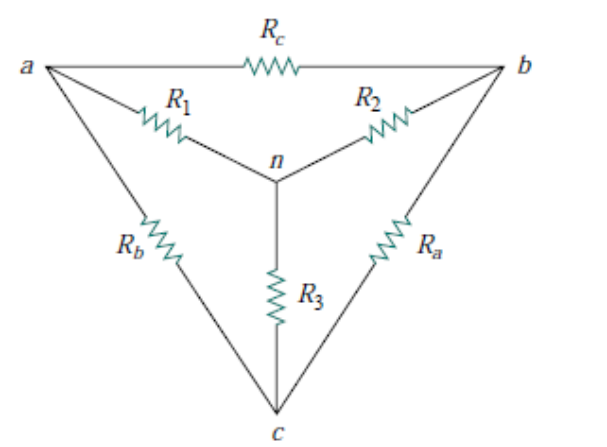


$$R_1 = \frac{R_b R_c}{R_a + R_b + R_c}$$

$$R_2 = \frac{R_c R_a}{R_a + R_b + R_c}$$

$$R_3 = \frac{R_a R_b}{R_a + R_b + R_c}$$

Each resistor in the Y network is the product of the resistors in the two adjacent Δ branches, divided by the sum of the three Δ resistors.

# Wye to Delta Conversion

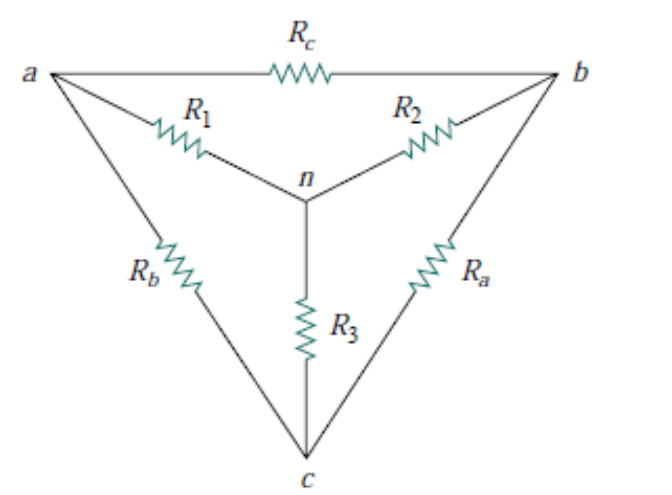


$$R_1 = \frac{R_b R_c}{R_a + R_b + R_c}$$ .....(a)

and

$$R_3 = \frac{R_a R_b}{R_a + R_b + R_c}$$ .....(b)

$$R_1 R_2 + R_2 R_3 + R_3 R_1 = \frac{R_a R_b R_c (R_a + R_b + R_c)}{(R_a + R_b + R_c)^2}$$

$$= \frac{R_a R_b R_c}{R_a + R_b + R_c}$$ .....(c)

# Wye to Delta Conversion

Dividing Eq (c) by each of Eq (a) Eq (b) leads to the following equations:

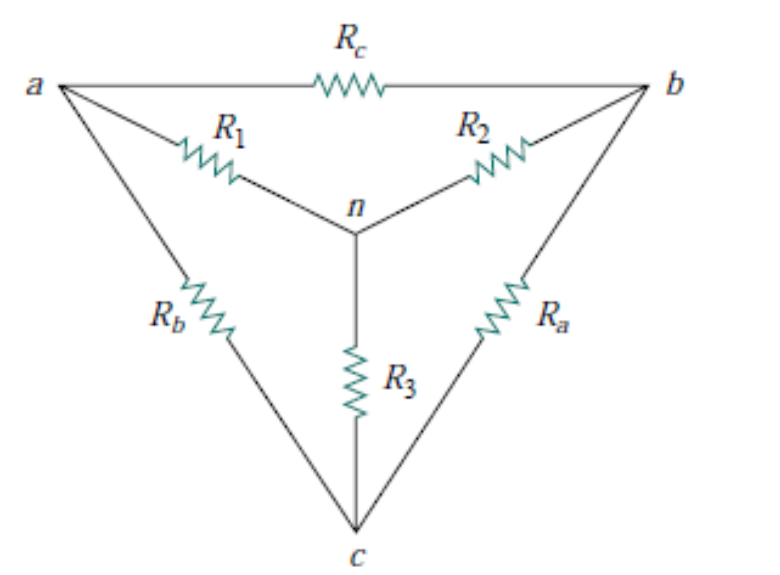


$$R_a = \frac{R_1R_2 + R_2R_3 + R_3R_1}{R_1}$$

$$R_b = \frac{R_1R_2 + R_2R_3 + R_3R_1}{R_2}$$

$$R_c = \frac{R_1R_2 + R_2R_3 + R_3R_1}{R_3}$$

Each resistor in the $\Delta$ network is the sum of all possible products of Y resistors taken two at a time, divided by the opposite Y resistor.

The Y and $\Delta$ networks are said to be *balanced* when

$$R_1 = R_2 = R_3 = R_Y, \qquad R_a = R_b = R_c = R_\Delta$$

Under these conditions, conversion formulas become

$$\boxed{R_Y = \frac{R_\Delta}{3} \qquad \text{or} \qquad R_\Delta = 3R_Y}$$

Convert the Δ network in Fig. 2.50(a) to an equivalent Y network.

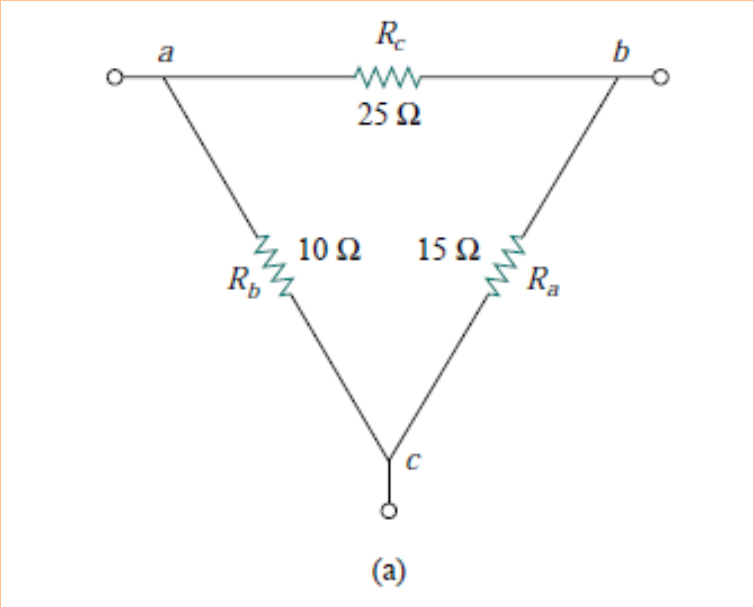


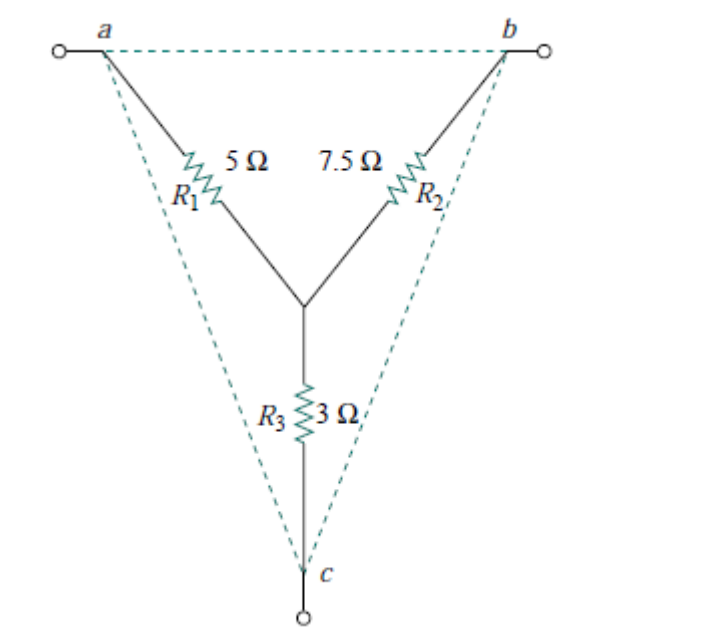


$$R_1 = \frac{R_b R_c}{R_a + R_b + R_c} = \frac{25 \times 10}{25 + 10 + 15} = \frac{250}{50} = 5\ \Omega$$

$$R_2 = \frac{R_c R_a}{R_a + R_b + R_c} = \frac{25 \times 15}{50} = 7.5\ \Omega$$

$$R_3 = \frac{R_a R_b}{R_a + R_b + R_c} = \frac{15 \times 10}{50} = 3\ \Omega$$

Obtain the equivalent resistance $R_{ab}$ for the circuit in Fig. 2.52 and use it to find current $i$.

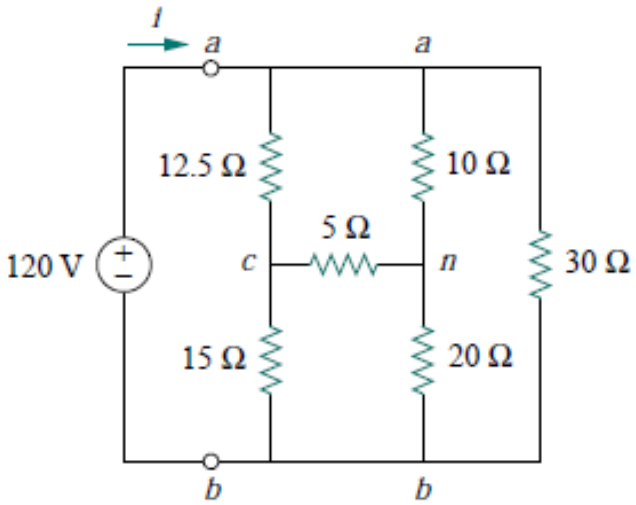


Figure 2.52 For Example 2.15.

$$R_1 = 10\ \Omega, \qquad R_2 = 20\ \Omega, \qquad R_3 = 5\ \Omega$$

$$R_a = \frac{R_1R_2 + R_2R_3 + R_3R_1}{R_1} = \frac{10 \times 20 + 20 \times 5 + 5 \times 10}{10}$$

$$= \frac{350}{10} = 35\ \Omega$$

$$R_b = \frac{R_1R_2 + R_2R_3 + R_3R_1}{R_2} = \frac{350}{20} = 17.5\ \Omega$$

$$R_c = \frac{R_1R_2 + R_2R_3 + R_3R_1}{R_3} = \frac{350}{5} = 70\ \Omega$$

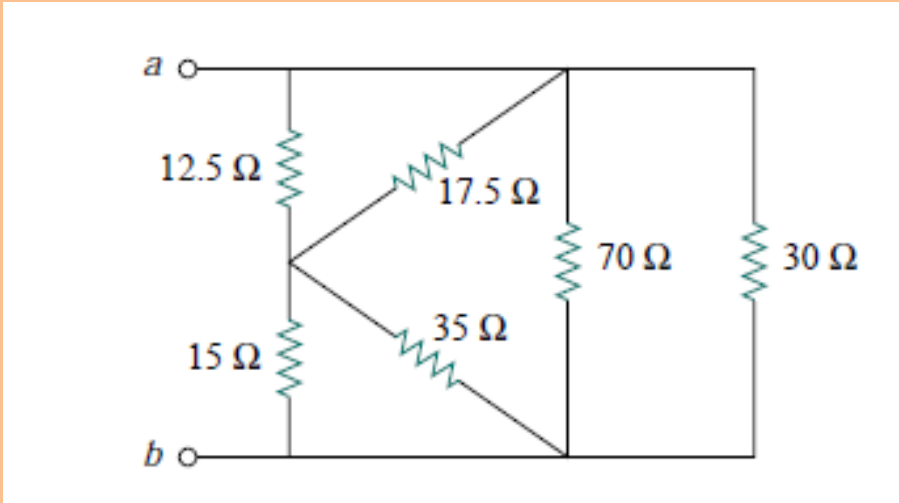

$$70 \parallel 30 = \frac{70 \times 30}{70 + 30} = 21\ \Omega$$

$$12.5 \parallel 17.5 = \frac{12.5 \times 17.5}{12.5 + 17.5} = 7.2917\ \Omega$$

$$15 \parallel 35 = \frac{15 \times 35}{15 + 35} = 10.5\ \Omega$$

so that the equivalent circuit is shown in Fig. 2.53(b). Hence, we find

$$R_{ab} = (7.292 + 10.5) \parallel 21 = \frac{17.792 \times 21}{17.792 + 21} = 9.632\ \Omega$$

Then
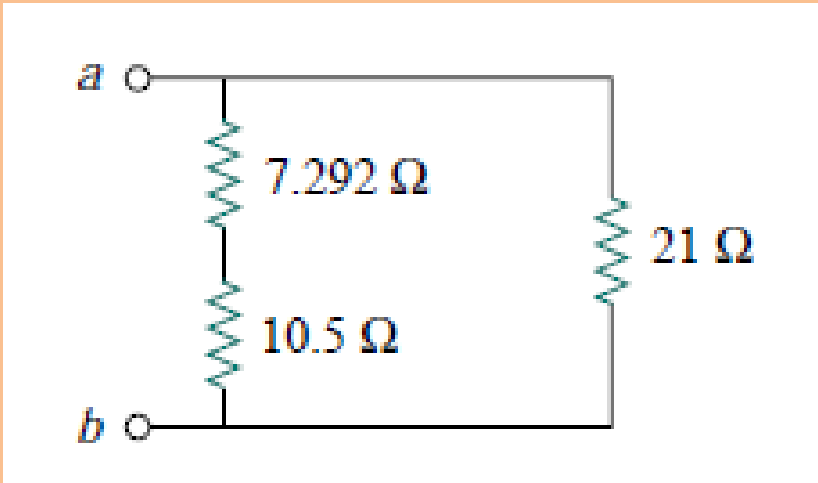
$$i = \frac{v_s}{R_{ab}} = \frac{120}{9.632} = 12.458\ \text{A}$$